OPERA America's

NATIONAL OPERA CENTER

RATES & SPACES 2027

OPERA AMERICA

Introduction

Located in the heart of New York City, our custom-built facility is a communal home for the performing arts. Founded by OPERA America, the National Opera Center welcomes opera companies, theater artists, chamber ensembles, instrumentalists, teachers, and creators across disciplines for performances, rehearsals, auditions, recordings, meetings, special events, networking, and more.

Make yourself comfortable in clean, modern, and acoustically excellent spaces that accommodate a wide range of activities, from solo practice and teleconference meetings to full-scale performances, recitals, and workshops.

Enjoy regularly tuned, high-quality pianos in every studio and hall, and take advantage of our newly upgraded theatrical LED lighting system — now offering a full spectrum of color options to help your event find its perfect look. Record your material or livestream an event with recording and technical packages that are now more affordable than ever.

OPERA AMERICA MEMBERS ENJOY UP TO 33% OFF ALL REGULAR RATES!

Learn more about membership benefits on page 17.

OPERA AMERICA

Contents

3 Rental Rates at a Glance

5 Marc A. Scorca Hall

7 Rehearsal Hall

8 Charles MacKay Studio

9 Private Studios

11 Studio Happy Hours

12 Leirvik Boardroom

13 Recording Packages

14 Technical Add-Ons

16 Services & Amenities

17 Member Benefits

18 Visitor Information

Technical Addendum

19 Rules & Regulations

21 Floor Layouts

23 Freight Elevator

24 Floor Plans

BOOK YOUR SPACE TODAY

Reservations@operaamerica.org

212.796.8630

Rental Rates at a Glance

Multipurpose Spaces			BOOKING TYPES			
			Audition	Event/ Gathering	Rehearsal	Self-Managed Recording
MARC A. SCORCA HALL Capacity: 72	Member Rate		$130/hr	$130/hr	$130/hr	$130/hr
	Non-Member Rate		$180/hr	$180/hr	$180/hr	$180/hr
	Optional Paid Add-Ons*	Custom Setup	Included	$25	$25	$25
		Tech	O	O	O	O
		Staffing	O	O	–	–
		Recording	O	O	–	–
		Table Linens	O	O	–	–
REHEARSAL HALL Capacity: 60	Member Rate		$95/hr	$95/hr	$95/hr	$95/hr
	Non-Member Rate		$125/hr	$125/hr	$125/hr	$125/hr
	Optional Paid Add-Ons*	Custom Setup	Included	$25	$25	$25
		Tech	O	O	O	O
		Staffing	O	O	–	–
		Recording	O	O	–	–
		Table Linens	O	O	–	–
CHARLES MACKAY STUDIO Capacity: 30	Member Rate		$50/hr	$50/hr	$50/hr	$50/hr
	Non-Member Rate		$75/hr	$75/hr	$75/hr	$75/hr
	Optional Paid Add-Ons*	Custom Setup	Included	$25	$25	$25
		Tech	O	O	O	O
		Staffing	O	O	–	–
		Recording	–	–	–	–
		Table Linens	O	O	–	–

***Details for optional paid add-ons can be found on pages 14–15.**
Details on what is included in each space can be found on the relevant space pages. Please note that the default setup requires clients to reset the space. The room must be restored to its original setup prior to the end of the rental period. Rooms not restored to the original setup will be charged the Custom Setup fee.

MINIMUM BOOKING:

- **Events & bookings with setup:** 2 hours
- **All other bookings:** 1 hour

Special Rates

- **Nonprofit Rates:** Nonprofits receive 10% off non-member rates in Scorca Hall, Rehearsal Hall, MacKay Studio, Leirvik Boardroom, and the Pamela J. Hoiles Reception Lobby.
- **Day-of Rates:** Scorca Hall, Rehearsal Hall, and MacKay Studio may be booked day-of for 50% off the regular rates.
- **Lockout Rates:** Special lockout rates are available for contiguous multi-day rentals of Scorca Hall, Rehearsal Hall, and MacKay Studio. Inquire about lockout rates when booking.

Rates are valid as of January 1, 2027, and are subject to change without notice. Additional charges may apply for the use of equipment.

OPERA AMERICA

Rental Rates at a Glance

Private Studios	MEMBER RATE	NON-MEMBER RATE
PREMIUM STUDIOS Capacity: 8–12	$29/hr	$39/hr
STANDARD STUDIOS Capacity: 4–8	$23/hr	$31/hr
ECONOMY STUDIOS Capacity: 4	$17/hr	$23/hr

Other Spaces	MEMBER RATE	NON-MEMBER RATE
LEIRVIK BOARDROOM Capacity: 18	$45/hr	$60/hr
PAMELA J. HOILES RECEPTION LOBBY* Capacity: 72	$30/hr	$40/hr

Recording Sessions**	MEMBER RATE	NON-MEMBER RATE
AUDIO RECORDING SESSION	$175/hr	$225/hr
SINGLE-CAMERA RECORDING	$200/hr	$250/hr
MULTI-CAMERA RECORDING	$250/hr	$300/hr

***Only available in conjunction with a booking in Scorca Hall.**
****All recording sessions are conducted in Scorca Hall and include the rental of the hall.**

MINIMUM BOOKING:

- **Events & bookings with setup:** 2 hours
- **All other bookings:** 1 hour

Rates are valid as of January 1, 2027, and are subject to change without notice. Additional charges may apply for the use of equipment.

Marc A. Scorca Hall

The centerpiece of the National Opera Center, Marc A. Scorca Hall offers you an impressive yet intimate space for performances, recitals, private auditions, and recordings.

INCLUDED IN THE SPACE:

- 55' x 21' hall with 20' arched ceiling
- Wood floor
- Platform stage
- Backstage space and wings
- Adjustable acoustic panels
- Theatrical LED lighting system
- Yamaha C6X grand piano
- Access to a 15'x18' Green Room with a Yamaha N3X AvantGrand hybrid electric piano and seating for 12

DEFAULT SETUP:

- 64 chairs in theater seating
- 12 Wenger musician chairs stacked backstage
- 12 music stands backstage

OPTIONAL PAID ADD-ONS:

- **Tech:** Microphones, video projection system (motorized screen), amplification
- **Staffing:** House manager, audition monitor, technical engineer
- **Event Recording Services:** Single-camera, multi-camera, livestream

CAPACITY:

- **Theater seating:** 72
- **Hollow square seating:** 40
- **U-shape seating:** 35

MINIMUM BOOKING:

- **Recording Sessions:** 1 hour
- **Events & bookings with custom setup:** 2 hours
- **All other bookings:** 1 hour

Booking Type	What's Included	Custom Setup Fee*	Member Rate	Non-Member Rate	Optional Paid Add-ons
Audition	Audition Setup	Included	$130/hr	$180/hr	Tech, Staffing, Recording
Event/Gathering	Default Setup	$25/setup			Tech, Staffing, Recording, Custom Setup
Rehearsal					Tech, Custom Setup
Self-Managed Recording					Tech, Custom Setup

***Custom pre-event setup is optional. If you do not need this service, you can use the room in its default setup without paying the additional custom setup fee. Please note that for bookings without custom setup, the room must be returned to its default setup; otherwise, a $25 fee will be applied.**

NOTE: Marc A. Scorca Hall may be booked day-of for 50% off the rates listed above. Nonprofits receive 10% off non-member rates. For more information on Recording Sessions, see page 13.

Rates are valid as of January 1, 2027, and are subject to change without notice. Additional charges may apply for the use of equipment.

OPERA AMERICA

Marc A. Scorca Hall
New Theatrical LED Lighting System

The centerpiece of the National Opera Center, Marc A. Scorca Hall debuts an all-new theatrical LED lighting system in fall 2026. The upgrade includes a full suite of ETC lighting fixtures — including Lustr2 and Selador Desire D40 — to illuminate the jewel-box recital hall.

THE NEW LIGHTING SYSTEM OFFERS:

Unique light customization

Customize the color of your front light, side light, and back light to fit your individual event.

More control

Take control over the ambiance and atmosphere of your event by changing the color and intensity of your lighting.

No expertise required

The new system will allow for radical changes without the need for lighting expertise.

Greater comfort onstage and off

LED lights emit less heat, which means a more comfortable climate in the hall.

Questions about the new lighting system can be directed to Tech@operaamerica.org.
Photo and video samples of the system in use in the hall will be available in fall 2026.

Rehearsal Hall

The Rehearsal Hall is a highly adaptable space that allows you the creative flexibility of running a workshop, producing a chamber concert, holding auditions, or hosting a special event.

INCLUDED IN THE SPACE:

- 49' x 24' hall with 11' ceiling
- Acoustic panels
- Wood floor
- Adjustable LED smart lighting
- Steinway 9' grand piano

DEFAULT SETUP:

- 30 Wenger music chairs, stacked against the wall
- 15 music stands
- 2 rolling tables

OPTIONAL PAID ADD-ONS:

- **Tech:** Microphones, video projection system (motorized screen), amplification
- **Staffing:** House manager, audition monitor
- **Event Recording Services:** Single-camera, livestream

CAPACITY:

- **Theater seating:** 60
- **Hollow square seating:** 40
- **U-shape seating:** 35
- **Standing reception:** 60

MINIMUM BOOKING:

- **Events & bookings with custom setup:** 2 hours
- **All other bookings:** 1 hour

Booking Type	What's Included	Custom Setup Fee*	Member Rate	Non-Member Rate	Optional Paid Add-ons
Audition	Audition Setup	Included	$95/hr	$125/hr	Tech, Staffing, Recording
Event/Gathering	Default Setup	$25/setup			Tech, Staffing, Recording, Custom Setup
Rehearsal					Tech, Custom Setup
Self-Managed Recording					Tech, Custom Setup

***Custom pre-event setup is optional. If you do not need this service, you can use the room in its default setup without paying the additional custom setup fee. Please note that for bookings without custom setup, the room must be returned to its default setup; otherwise, a $25 fee will be applied.**

NOTE: Rehearsal Hall may be booked day-of for 50% off the rates listed above. Nonprofits receive 10% off non-member rates. For more information on Recording Sessions, see page 13.

Rates are valid as of January 1, 2027, and are subject to change without notice. Additional charges may apply for the use of equipment.

Charles MacKay Studio

OPERA AMERICA

The multipurpose Charles MacKay Studio offers you a mid-sized venue for auditions, rehearsals, receptions, and meetings.

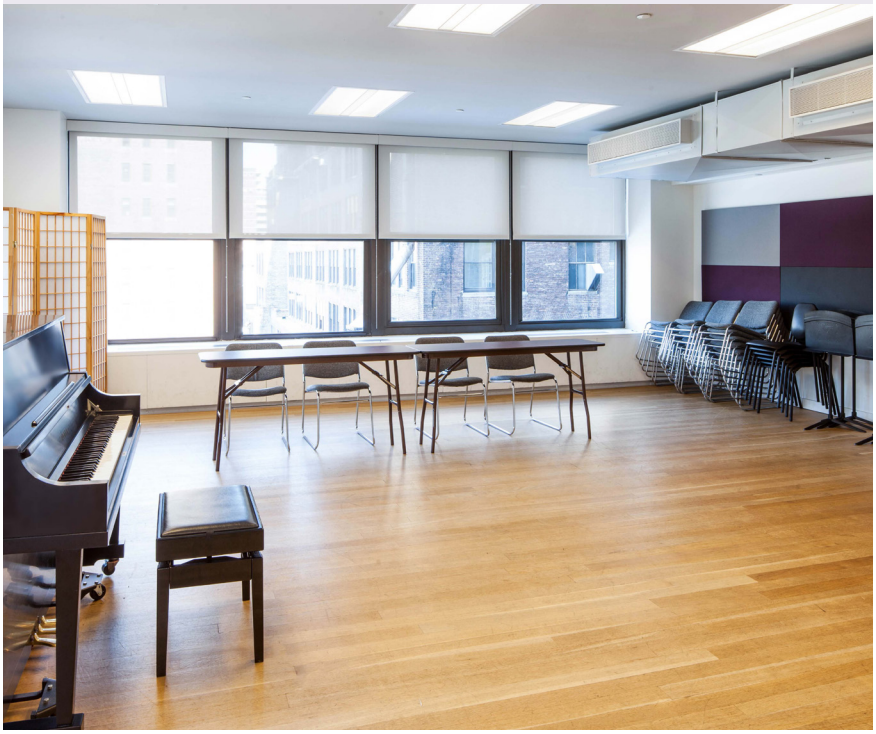

INCLUDED IN THE SPACE:

- 27' x 22' studio with 10' ceiling
- West-facing windows
- Wood floor
- 60" HD television
- Natural and fluorescent lighting
- Yamaha 5'3" grand piano

DEFAULT SETUP:

- 30 Wenger music chairs, stacked against the wall
- 15 music stands
- 2 folding tables

OPTIONAL PAID ADD-ONS:

- **Tech:** Connection to TV for presentations
- **Staffing:** House manager, audition monitor

CAPACITY:

- **Theater Seating:** 30
- **Hollow square seating:** 24
- **U-shape seating:** 20
- **Standing reception:** 30

MINIMUM BOOKING:

- **Events & bookings with custom setup:** 2 hours
- **All other bookings:** 1 hour

Booking Type	What's Included	Custom Setup Fee*	Member Rate	Non-Member Rate	Optional Paid Add-ons
Audition	Audition Setup	Included	$50/hr	$75/hr	Tech, Staffing
Event/Gathering	Default Setup	$25/setup			Tech, Staffing, Custom Setup
Rehearsal					Tech, Custom Setup
Self-Managed Recording					Tech, Custom Setup

***Custom pre-event setup is optional. If you do not need this service, you can use the room in its default setup without paying the additional custom setup fee. Please note that for bookings without custom setup, the room must be returned to its default setup; otherwise, a $25 fee will be applied.**

NOTE: MacKay Studio may be booked day-of for 50% off the rates listed above. Nonprofits receive 10% off non-member rates.

Rates are valid as of January 1, 2027, and are subject to change without notice. Additional charges may apply for the use of equipment.

OPERA AMERICA

Private Studios

The National Opera Center's 12 studios provide private space for solo practice, coachings, or small ensembles. Available in three tiered sizes, all studios include regularly tuned pianos, musicians' chairs, music stands, and wall mirrors.

Room Type	Room	Capacity	Dimensions (10' ceiling in all studios)	Windows	Member	Non-Member Rate
Premium Studios	**Studio 706** Virginia B. Toulmin Studio	12	17'5" x 14'8"		**$29/hr**	**$39/hr**
	Studio 710	8	15'2" x 12'10"			
	Studio 711 Beverly Sills Studio	12	18' x 15'2"	○		
Standard Studios	**Studio 703** Elizabeth and Jean-Marie Eveillard Studio	6	15'6" x 9'6"		**$23/hr**	**$31/hr**
	Studio 708 — *New Space* James D. Ireland Studio	6	9'6" x 14'6"			
	Studio 712 Dr. Steve and Rochelle Prystowsky Studio	8	14'2" x 11'2"	○		
	Studio 806 — *New Space* Lesenger Family Studio East	6	8'6" x 14'	○		
	Studio 807 — *New Space* Lesenger Family Studio West	6	8'6" x 14'	○		
Economy Studios	**Studio 705** Jill and William Steinberg Studio	4	13'8" x 8'6"	○	**$17/hr**	**$23/hr**
	Studio 801 Jane A. Gross Studio	4	10'6" x 10'5"			
	Studio 802 Jane and Mort Robinson Studio	4	10'7" x 10'6"			
	Studio 803	4	10' x 8'9"			

Rates are valid as of January 1, 2027, and are subject to change without notice. Additional charges may apply for the use of equipment.

Private Studios

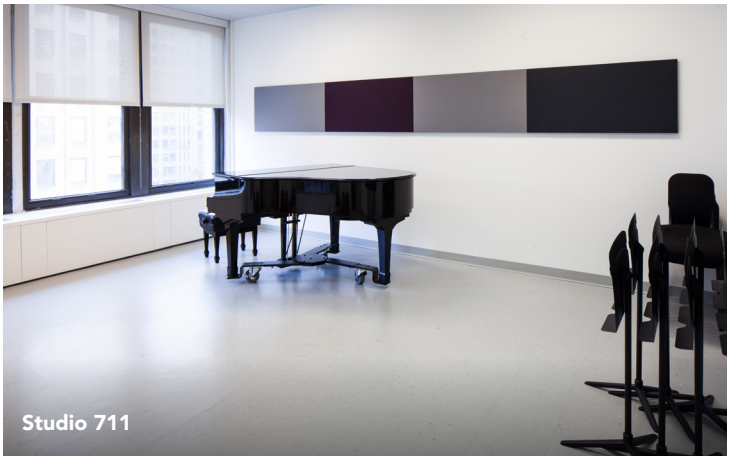
Studio 711

PREMIUM STUDIOS

These studios allow you the most flexibility in your practice needs, with ample space for theatrical coachings or ensemble rehearsals.

FEATURES:

- Yamaha 7' grand piano in Studio 711
- Yamaha 5'3" grand piano in Studios 706 & 710
- Musicians' chairs
- Music stands
- Wall mirror
- Folding table
- Natural light available in select rooms

Members: $29/hr | Non-Member: $39/hour

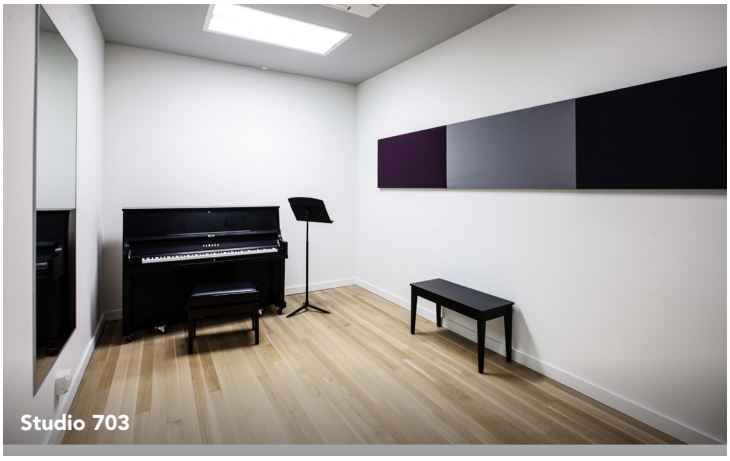
Studio 703

STANDARD STUDIOS

These studios provide you with mid-sized, private rooms for solo practice, coaching sessions, or small ensemble rehearsals.

FEATURES:

- Yamaha 45" upright piano
- Musicians' chairs
- Music stands
- Wall mirror
- Folding table
- Natural light available in select rooms

Members: $23/hr | Non-Member: $31/hour

Studio 801

ECONOMY STUDIOS

These studios offer you our most affordable spaces for private practice or small group coaching.

FEATURES:

- Yamaha 45" upright piano
- Musicians' chairs
- Music stands
- Wall mirror
- LED lighting

Members: $17/hr | Non-Member: $23/hour

Rates are valid as of January 1, 2027, and are subject to change without notice. Additional charges may apply for the use of equipment.

Studio Happy Hours

Studio Happy Hours make vocal, instrumental, and theatrical rehearsals at OPERA America's National Opera Center even cheaper with subsidized rates for studio spaces.

During select times every week, individuals seeking space for creative rehearsal can book the facility's studios at special Studio Happy Hours rates.

The Studio Happy Hours program is made possible by the New York State Council on the Arts with the support of the Office of the Governor and the New York State Legislature.

SPECIAL HOURS & RATES FOR 2027 WILL BE ANNOUNCED IN FALL 2026.

Leirvik Boardroom

The Barbara and Ronald Leirvik Boardroom gives you a professional setting for meetings, presentations, teleconferences, and interviews around an executive board table.

INCLUDED IN THE SPACE:

- 31' x 14' room with 10' ceiling
- Carpeted floor
- 80" HD television
- LED lighting
- Board table
- 6' x 4' rolling white board and erasable markers

DEFAULT SETUP:

- 15 executive chairs
- Wireless video and Zoom teleconferencing capability

CAPACITY:

- Default seating: 15
- Mixed seating: 18

MINIMUM BOOKING:

- 1 hour

Booking Type	Rate
Member	$45/hr
Non-Member	$60/hr

Rates are valid as of January 1, 2027, and are subject to change without notice. Additional charges may apply for the use of equipment.

Recording Packages

The Opera Center offers all-inclusive audio and video recording packages to help you prepare your audition materials or share a new project.

PLEASE NOTE: All-inclusive Recording Session packages include the rental of Marc A. Scorca Hall, all recording equipment, and basic editing.

Audio Recording Session in Marc A. Scorca Hall

An audio recording package includes a recording engineer and microphones. Five business days after your recording session, you will receive mixed-down audio tracks in both WAV and MP3 formats.

Booking Type	Members	Non-Members
Audio Recording Session	$175/hr	$225/hr

Video Recording Session in Marc A. Scorca Hall

A video recording package includes a recording engineer and microphones. Five business days after your recording session, you will receive a high-definition video recording of the session in MP4 format, as well as separate audio tracks in both WAV and MP3 formats.

Booking Type	Members	Non-Members
Single-Camera Video Recording Session	$200/hr	$250/hr
Multi-Camera Video Recording Session	$250/hr	$300/hr

Rates are valid as of January 1, 2027, and are subject to change without notice. Additional charges may apply for the use of equipment.

OPERA AMERICA

Technical and Recording Add-Ons

The Opera Center events team can help you customize your visit with affordable technical support for audio-visual needs and flexible audio and video recording setups.

PLEASE NOTE: The rates below are for add-ons only and do not include the price of room rentals. Add-ons are only available in select spaces.

Event Recording *Includes engineer and room microphones.*	**Rate**
Single-Camera	
Marc A. Scorca Hall	**$150/hr**
Rehearsal Hall	**$135/hr**
Livestream in Marc A. Scorca Hall	**$75 (flat rate per event)**
Multi-Camera	
Marc A. Scorca Hall	**$200/hr**
Livestream in Marc A. Scorca Hall	**$125 (flat rate per event)**

Audio/Video *Does not include a technician throughout the event. See next page for event staff rates.*	**Rate**
Audio Amplifaction	
One Wired Microphone (with PA System) *(Maximum available: 4)*	**$50/day**
One Wireless Microphone (with PA System) *(Maximum available: 2)*	**$75/day**
Projection	
Marc A. Scorca Hall *(does not include computer)*	**$150/day**
Rehearsal Hall *(does not include computer)*	**$60/day**

Rates are valid as of January 1, 2027, and are subject to change without notice. Additional charges may apply for the use of equipment.

OPERA AMERICA

Add-Ons

PLEASE NOTE: Custom setup fees apply to rentals for Rehearsals, Events/Gatherings, and Self-Managed Recordings. Custom setup is included in rentals for Auditions.

Furniture and Meeting Equipment	Rate
Lectern *(Maximum available: 3)*	Included*
5' x 2.5' Table	Included*
5' x 1.5' Table	Included*
Flip Chart/Easel *(Maximum available: 3)*	$25 each per day
Table Linen	$35 each per day
Table Skirt	$40 each per day
Table Linen & Skirt Combo	$65 each per day

**Complimentary equipment and services are provided, pending availability, on a first-come basis.*

Staff and Additional Services	Rate
House Manager *(2-hour minimum)*	$40/hr
Audition Monitor *(2-hour minimum)*	$40/hr
Technical Engineer *(2-hour minimum)*	$125/hr
Early Open *(prior to 10:00 a.m.)*	$100/hr
Late Close *(after 10:00 p.m.)*	$150/hr
Piano Tuning	$225/tuning

Custom Setup Fees	Rate
Marc A. Scorca Hall	$25/setup
Rehearsal Hall	$25/setup
Charles MacKay Studio	$25/setup

Rates are valid as of January 1, 2027, and are subject to change without notice. Additional charges may apply for the use of equipment.

Services and Amenities

Whether you come for lessons, a meeting with colleagues, or your next recital, OPERA America's National Opera Center is outfitted to make your life easy.

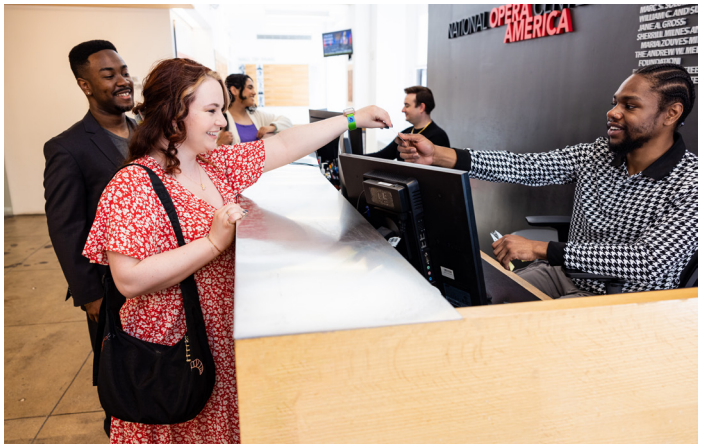

Complimentary Wi-Fi Access

Enjoy free internet throughout the Opera Center.

Lounge with Vending Machines

Grab a snack, refreshment, or hot cup of coffee in the convenient artists' lounge.

Score Library

The Baisley Powell Elebash Score and Recording Library offers an array of vocal scores that visitors may borrow for on-site use at the Opera Center.

Member Benefits

OPERA America membership unites those working, volunteering, and finding enjoyment in opera around a shared vision for the future of the art form. We provide access to learning materials, professional opportunities, and the resources of our National Opera Center in New York City.

Enjoy the perks of membership at the National Opera Center:

- Save up to 33% off all space rentals.
- Take advantage of priority advance booking on spaces:

  Professional Company Members
  12 months in advance

  Associate, Business, and Educational Members
  9 months in advance

  Individual Members
  6 months in advance
- Save with member pricing on OPERA America programs, including OPERA America events and career development programs for artists.
- Enjoy benefits with National Opera Center partners.

Membership Types

Organizational Membership
Opera companies, educational institutions, industry businesses, and other arts entities benefit from OPERA America's collective knowledge and shared resources, as well as learning opportunities, professional development, and discounts.

Individual Membership
Artists, administrators, educators, trustees, and appreciators stand with OPERA America in support of opera. They benefit from resources, opportunities, and discounts to advance careers and deepen appreciation of the art form.

LEARN MORE AT OPERAAMERICA.ORG/MEMBERSHIP

Visitor Information

330 Seventh Avenue, 7th Floor | New York, NY 10001

Open Daily, 10:00 a.m. – 10:00 p.m.

Reservations@operaamerica.org | 212.796.8630

OPERA America's National Opera Center is centrally located in Midtown Manhattan on the southwest corner of 29th Street and Seventh Avenue. Enter on Seventh Avenue, and take the elevator to the seventh floor to check in at the front desk. The facility spans the seventh and eighth floors of the building, with an internal staircase providing access between them. There is no external entry to the eighth floor.

To access the National Opera Center from 7:00 p.m. to 10:00 p.m., use the intercom located to the right of the building's street-level entrance.

Getting Here

You can reach us using more than a dozen subway lines, including the 1 train (at 28th Street), 1/2/3/A/C/E trains (at Penn Station), and B/D/F/M/N/Q/R/W trains (at 34th Street-Herald Square). You can also arrive by Amtrak or PATH service, as well as regional bus lines and airport shuttles.

Accessibility

The Opera Center features ground-level entry with elevators to the venue. All spaces are wheelchair accessible, and modular seating can be arranged to accommodate wheelchair users for all programs and performances. Handicap-accessible restrooms are available on the seventh floor. For more information about accessibility, contact us at 212.796.8630 or Reservations@operaamerica.org.

Rules and Regulations for Rental and Use of the National Opera Center Facilities

DEPOSITS, CHANGES, AND CANCELLATIONS

1. For all contracted events, a deposit equal to half of the total rental fee is required upon receipt of the signed contract to confirm a reservation at the National Opera Center. All additional fees and balances must be paid in full a minimum of one week prior to use.
2. If a cancellation of any portion or the entirety of a rental is necessary, the Opera Center must be notified immediately. To receive a refund, cancellations must be submitted in writing. Deposits are 100% refundable if the reservation is canceled at least three months in advance of the booking date. Deposits are nonrefundable within 90 days of the booking date. Otherwise, cancellation charges are as follows:
   - Event Spaces, Equipment, and Services: 50% of contracted amount is due for portions canceled at least 30 days in advance; 100% of the contracted amount is due when canceled less than 30 days in advance. (Event Spaces include Scorca Hall, Rehearsal Hall, MacKay Studio, and Leirvik Boardroom.)
   - Vocal Studios: 100% of contracted amount is due when canceled less than 24 hours in advance of reservation start time.
3. If the nature of the event or number of participants changes, the Opera Center must be notified immediately, and no changes may be made within one week prior to the scheduled use. If necessary, fees/deposits will be changed according to applicable rates. The Opera Center reserves the right to disapprove any requested changes.
4. For inclement weather or emergencies, please note the renter is responsible for the full balance of the rental unless it is determined that the National Opera Center will be closed. In the event of closure, the renter will either be refunded the rental fees or may reschedule the rental at no charge.
5. After receipt of the signed rental agreement, any future changes at the client's request sent via invoice are also considered confirmed and subject to the above cancellation policy.
6. Organizations may not book under individual memberships. For bookings under individual member accounts, the individual must be present for the event and must be the point of contact for all paperwork.
7. Neither party shall be responsible for failure to perform this contract if circumstances beyond their control, including but not limited to acts of God, governmental authority, or war in the United States, that make it illegal or impossible for the Opera Center to hold the event.

PAYMENT OF FEES

1. Payment of all contracted rental fees must be made at least one week in advance of the scheduled use. Failure to meet this deadline may result in the cancellation of the rental and forfeiture of the deposit. Deposit must be made when the contract is signed.

RENTAL TIME/HOURS

1. Hours requested should include time for the renter's special setup and cleanup needs. For bookings that do not include custom setup, the renter is responsible for all setup and striking of materials and must account for that time in the rental. For bookings that include custom setup, Opera Center staff will preset the space prior to the booking start time. The renter is responsible for removing all materials they brought with them, while Opera Center staff will strike any house materials.
2. Renters will not have access to spaces prior to start time of their booking and need to completely vacate the spaces at the end time of their booking.
3. Renters will not have access to the National Opera Center prior to opening at 10:00 a.m. and must vacate the facility no later than 10:00 p.m., unless they have been approved in advance for an early open or late close.
4. If the event goes beyond the scheduled hours stated on the contract, the renter will be asked to vacate the space and will be liable for overage fees.

SET-UP/CLEAN-UP

1. Renters are responsible for setup of the space beyond what is requested in advance of the Opera Center staff. Renters are also responsible for leaving the space exactly as found at the beginning of the rental. Failure to return the space to the condition it was found in will result in additional fees.
2. If the Opera Center staff is responsible for custom setup and tear-down, then the renter must make sure all tables and chairs are wiped clean after the rental.
3. Nails, screws, staples, etc., are not permitted for use on walls, floors, ceilings, and fixtures in the Opera Center. Spike tape may be used on floors. Nothing may be affixed to walls.
4. For all bookings including custom setup services, a clear diagram (tables, chairs, and other setup needs) must be submitted to the Opera Center Management at least one week prior to the activity. If not supplied, the setup will not be done in advance.
5. Clients are not permitted to add or remove any furniture from any space. This includes all chairs and tables in the public artists' lounges on the 7th and 8th floors.
6. No signage of any kind may be posted in the ground floor lobby or on the building's exterior.

GENERAL FACILITY RULES

1. Neither prepared piano nor extended techniques are allowed at the National Opera Center.
2. Dance performance and rehearsal are not allowed at the National Opera Center.
3. No food or drink, except for water, is permitted in Marc A. Scorca Hall.
4. No red wine is permitted in the National Opera Center.
5. No open flames are permitted in the National Opera Center.
6. Electric micro-mobility devices such as e-bikes and e-scooters are not allowed anywhere in the facility.
7. Failure to adhere to these restrictions may result in substantial cleaning or repair fees.

BUILDING SUPERVISION AND REVOKING A RENTAL

1. An Opera Center representative will be on duty at all times and is responsible for general conduct in the building and enforcement of the rules governing the facilities.
2. Fights, vandalism, or unacceptable behavior occurring during a rental will cause immediate cancellation of the rental with no refund of fees or deposits.

3. The number of attendees cannot exceed the stated fire code capacity of the room rented. The National Opera Center reserves the right to immediately cancel any event that exceeds that code capacity.

OUTSIDE EQUIPMENT AND DELIVERIES

1. All outside equipment must be approved by the Opera Center Technical Director. All deliveries of said equipment must be scheduled with and approved by the Opera Center Management.
2. All deliveries of supplies, catering, etc., must be approved by Opera Center management.
3. All wheeled bags, road or instrument cases, or containers of any kind must come up through the freight elevator. The freight elevator is available weekdays from 10:00 a.m. to 5:00 p.m. If the elevator is needed outside of this time frame, Opera Center management must be informed in advance.
4. Failure to adhere to these policies may result in the rejection of equipment or deliveries from entering the National Opera Center.

TICKETED EVENTS, PUBLICITY, AND PRESS

1. If a rental involves an admission charge or registration fee, the renter is responsible for all ticketing services. The National Opera Center is NOT to be listed as the presenter or contact for ticket information or as the location for advanced registration/ticket sales, or as a program sponsor.
2. The National Opera Center reserves the right to review all promotional materials before they are sent to press.
3. The renter acknowledges that the National Opera Center is in no way responsible for publicizing rental events. Organizational members of OPERA America may post events to the OPERA America online calendar via their membership portal.

ADDITIONAL STAFFING

1. The National Opera Center can provide, for an additional fee and subject to staff availability, the following additional staff roles:

Audition Monitor

- Reports to renter at the start of their contracted shift.
- Checks in participants while collecting audition materials for the audition committee.
- Ensures participants take the space when they are meant to, which usually requires tracking time, and has the next participant ready when one walks out.

House Manager

- Reports to renter at the start of their contracted shift.
- Checks in guests based on list provided by renter.
- Sells tickets or merchandise provided by renter.
  - o Renter must instruct staffer on how to take payments and provide any point-of-sale hardware the staffer may need.
- Pre-event: Closes house doors, dims house lights, turns stage lights on, and makes preshow announcement.
  - o Renter must provide script if a pre-event announcement is requested.
- Seats late arrivals.
- Post-event: Opens house doors and turns house lights on.

CATERING, FOOD, AND DRINK

1. Alcohol may be served, but not sold.
2. No food or drink, except for water, is permitted in Marc A. Scorca Hall.
3. No red wine is permitted in the National Opera Center.
4. All outside food and beverage must be approved in advance by Opera Center management.

OTHER

1. No one shall perform any work or make additions to or subtractions from Opera Center pianos.
2. The Opera Center provides several preset lighting options. Renters are not permitted to refocus instruments.
3. Each individual and/or organization presenting public performances will be required to have liability insurance of $1,000,000 with OPERA America/National Opera Center named as additional insured. OPERA America retains the right to ask for proof of insurance at any time. This requirement may be waived for members of OPERA America at management's discretion.
4. The National Opera Center is not responsible for streaming and recording permissions of licensed materials.
5. Smoking and vaping are not permitted anywhere in the facility.
6. Clients of the National Opera Center are subscribed to OPERA America's email list; you may modify your subscription preferences or unsubscribe if you wish.
7. Any lactating individual who has business at the National Opera Center, such as auditions, performances, meetings, or other events, can request the use of a private studio for the purpose of pumping or expressing breast milk. If space is available at the time of the request, Opera Center staff will reserve a private studio for the individual free of charge. The individual does not need to have an existing booking at the Opera Center to be granted this accommodation. Private studios are clean, non-bathroom private spaces with a chair, a flat surface, and at least one electrical outlet. The individual will also have access to the Opera Center's catering refrigerator on the 7th floor, if needed. A freezer is not available. The National Opera Center recommends that individuals request space as early as possible to improve the chance of a studio being available. They should reach out via email to Reservations@operaamerica.og or via phone at 212.796.8620. While we will do everything we can to make suitable space available, we cannot guarantee that all requests can be accommodated if a space is not reserved in advance.

LIABILITY AND INDEMNITY

Applicant hereby agrees to hold OPERA America/the National Opera Center, the individual members thereof, and employees free and harmless from any loss, damage, liability, and cost of expense that may arise in any way by such loss or occupancy of the National Opera Center facilities.

By utilizing the National Opera Center, you agree to honor OPERA America's Community Guidelines, which can be viewed at operaamerica.org/CommunityGuidelines.

7th Floor Layout

Marc A. Scorca Hall | Rehearsal Hall | Premium studios | Standard studios

Economy studios | Pamela J. Hoiles Reception Lobby | Space not accessible to renters

8th Floor Layout

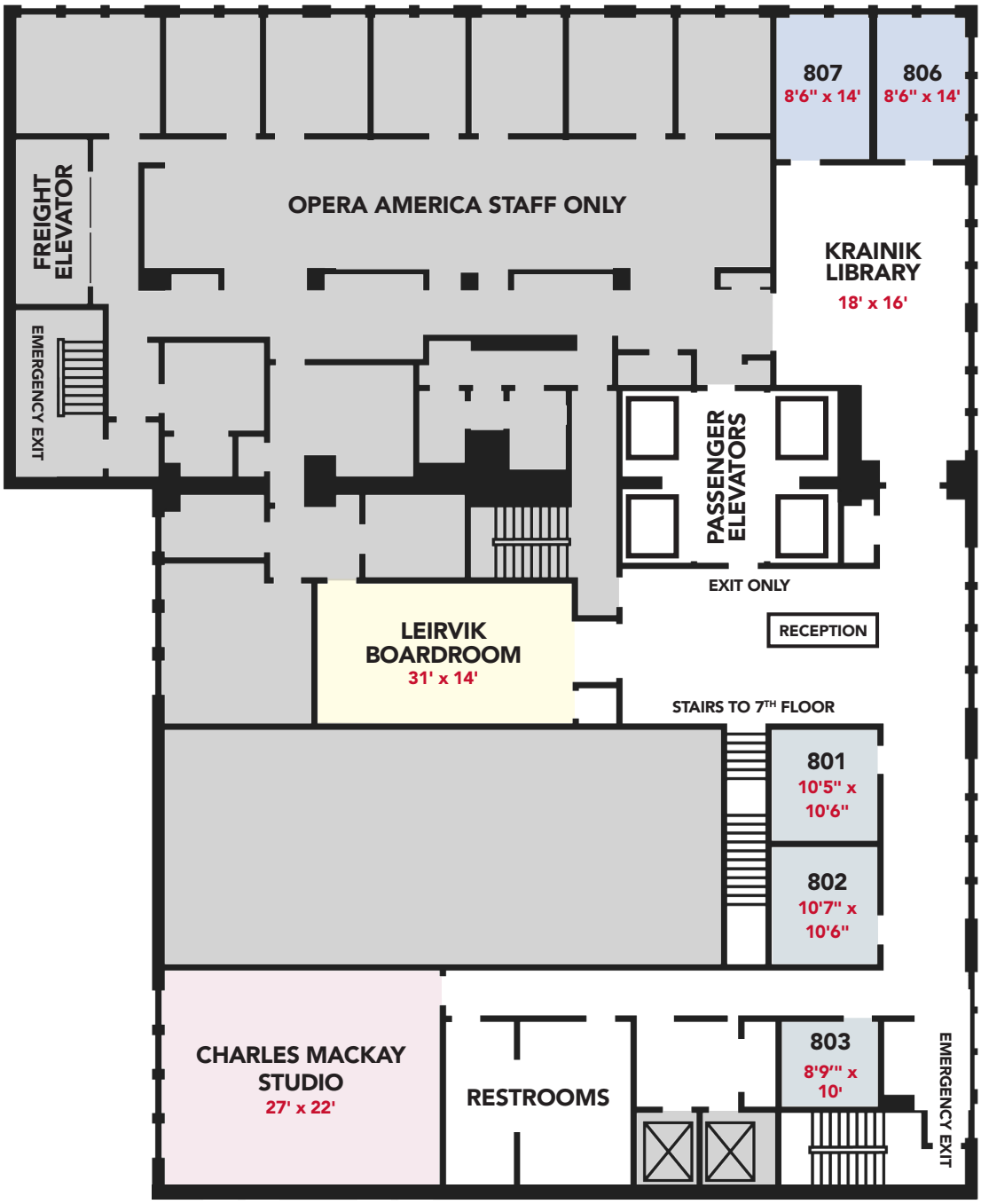

Board Room | Charles MacKay Studio | Standard studios | Economy studios | Space not accessible to renters

Freight Elevator

Front View

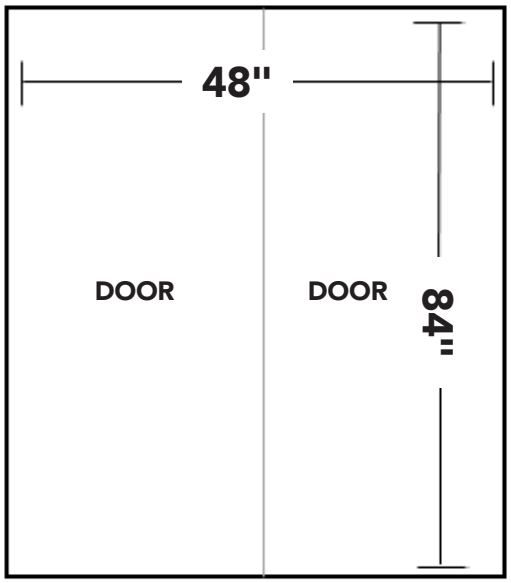

Top View

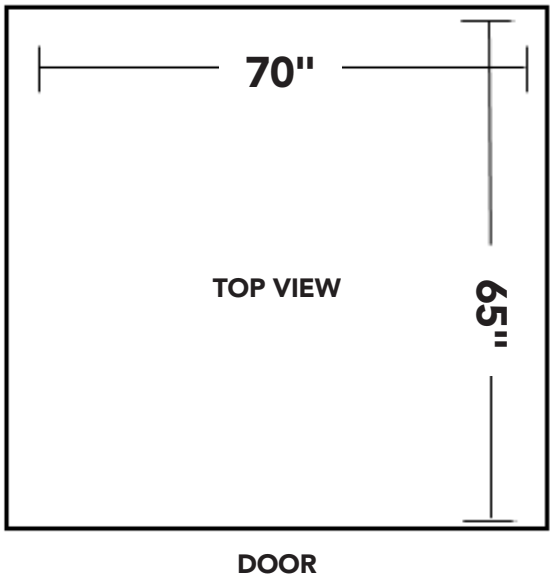

Side View

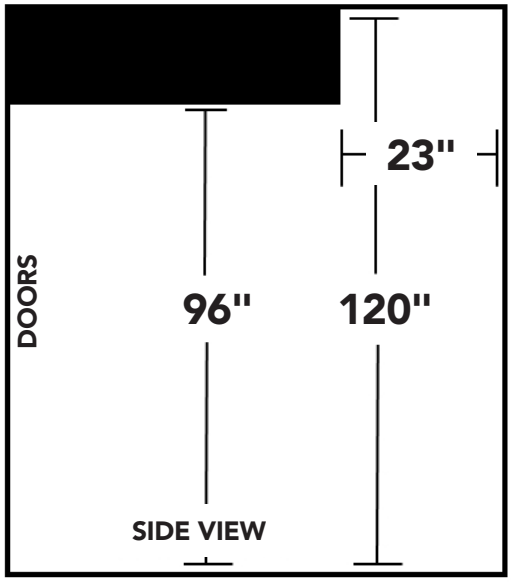

Frieght Specifications	
Max Capacity:	2,500 lbs.
Ceiling Height:	8'0"
Entrance:	Accessible at street level on 29th Street

Freight elevator access only available by advance request.

FLOOR PLANS
Marc A. Scorca Hall

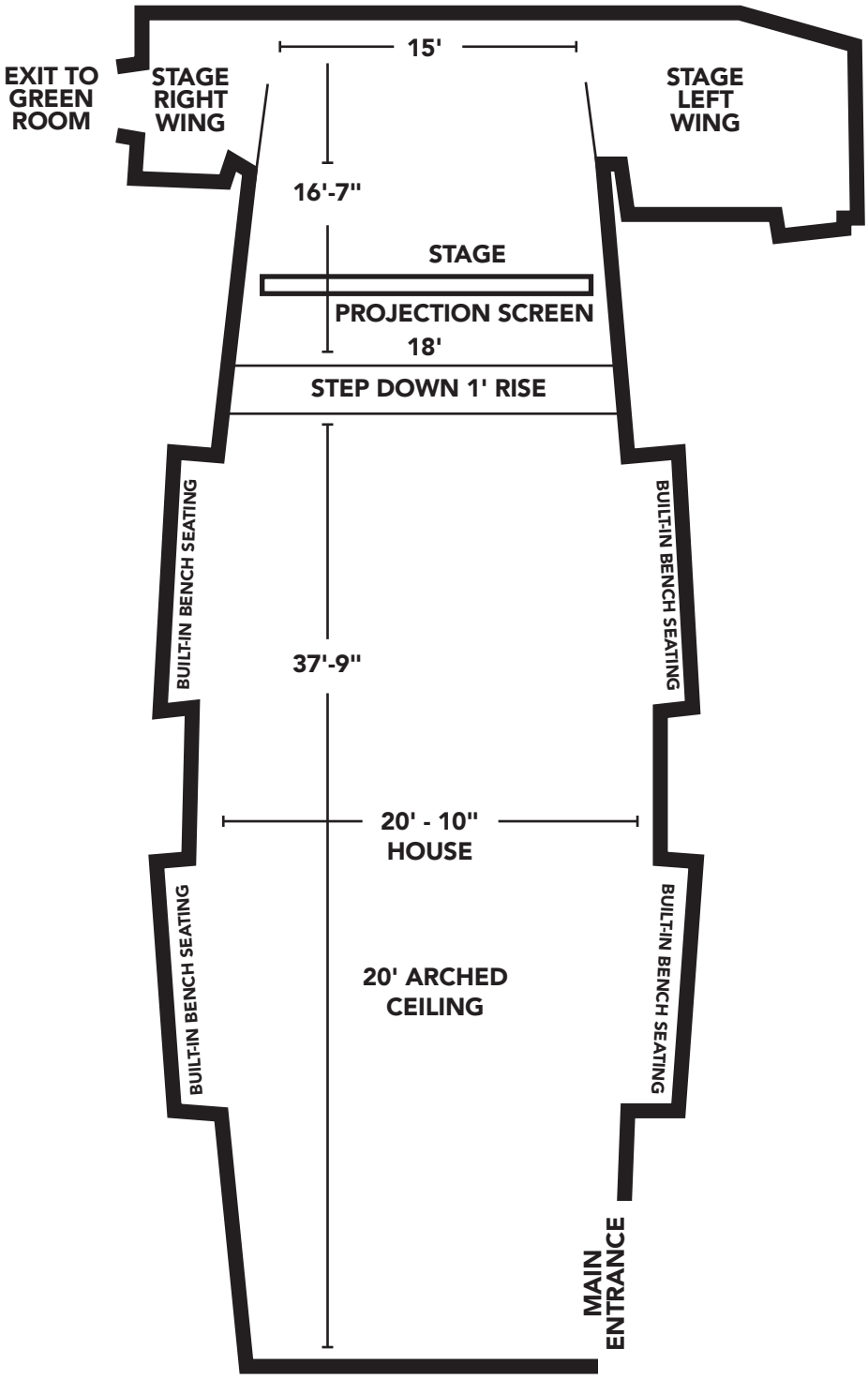

FLOOR PLANS
Rehearsal Hall

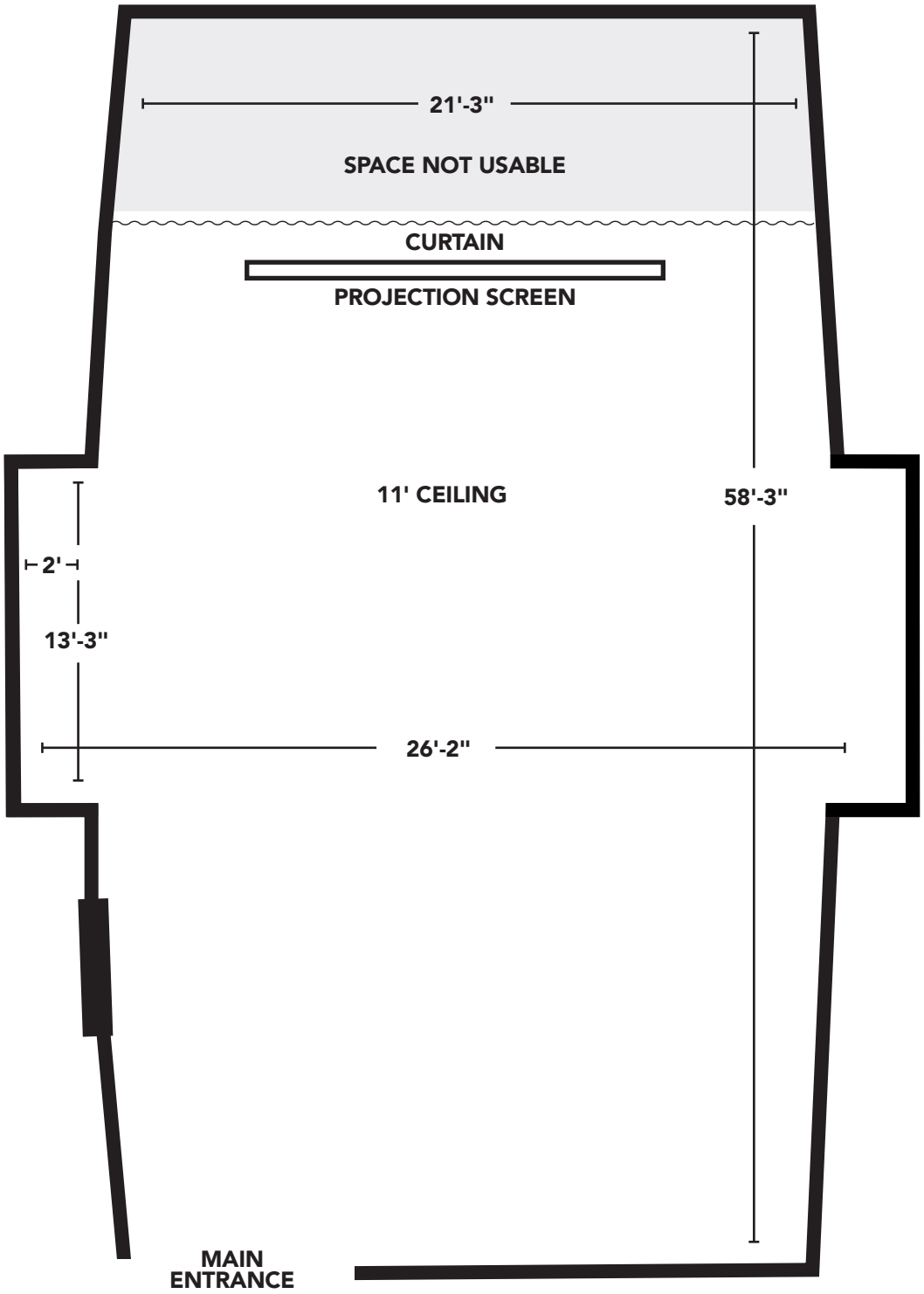

FLOOR PLANS
Charles MacKay Studio

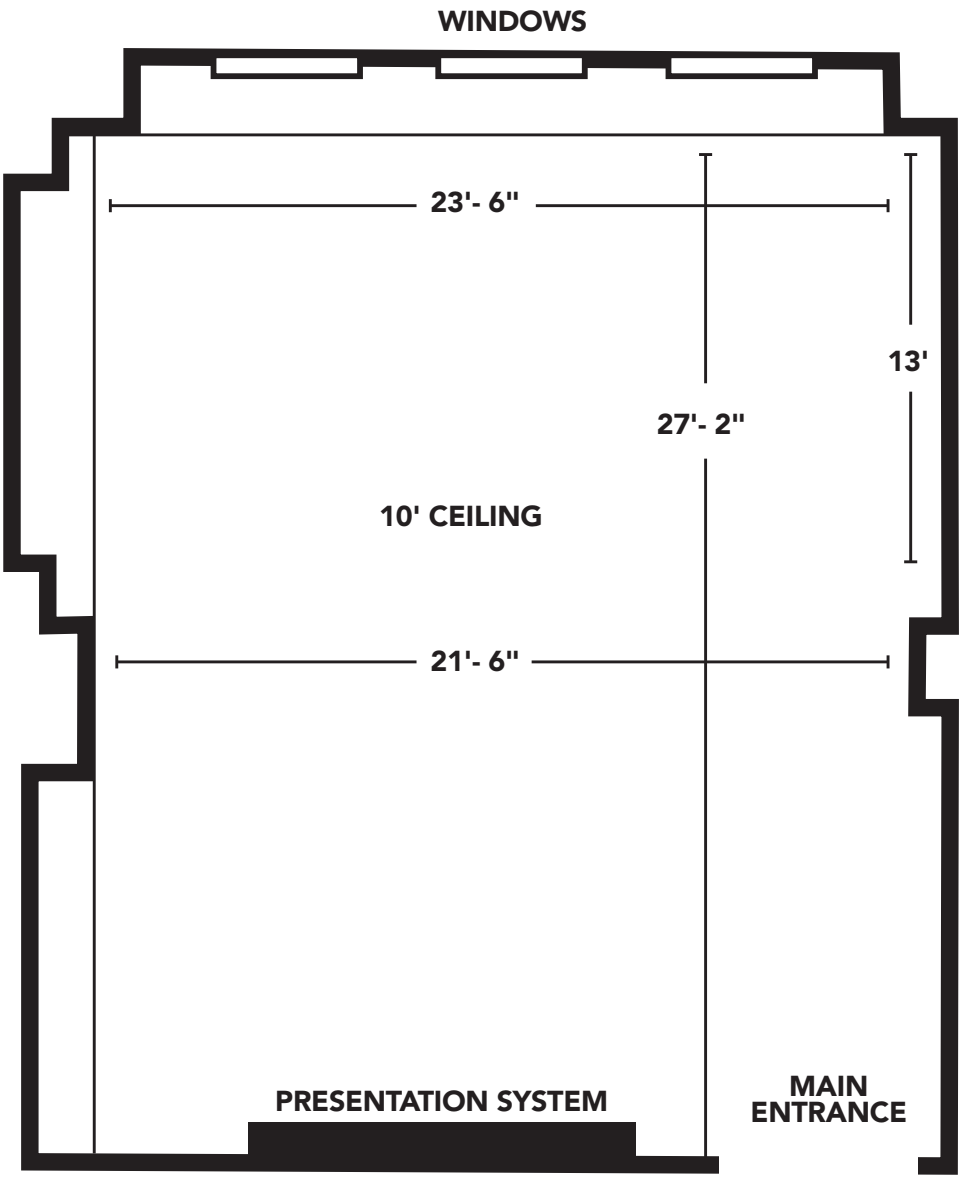

FLOOR PLANS
Barbara and Ronald Leirvik Boardroom

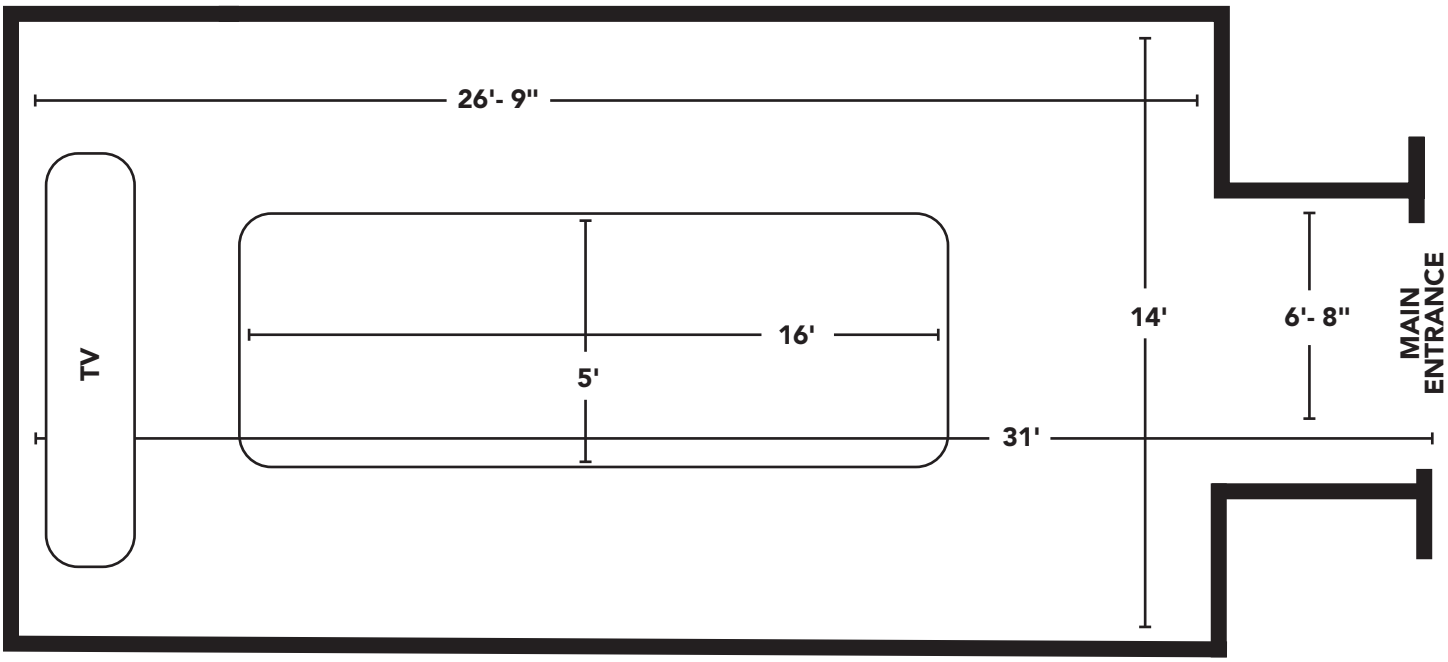

Board Room Specifications	
Table Dimensions:	16' x 5'
Table Seating Capacity:	15
Mixed Seating Capacity:	18

FLOOR PLANS
Studios

Standard Studio 703
147 sq ft | 10′ Ceiling | Capacity: 6

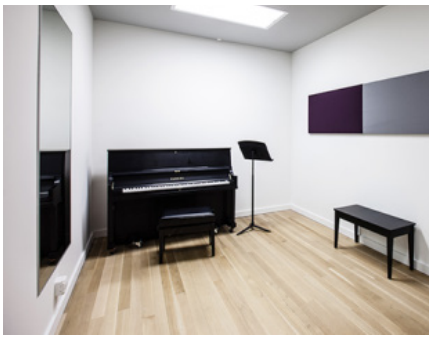

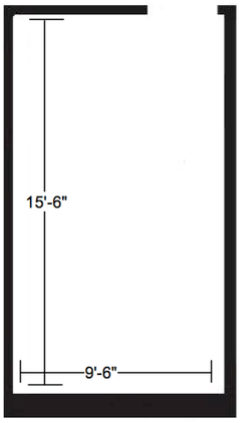

Economy Studio 705
115 sq ft | 10′ Ceiling | Capacity: 4

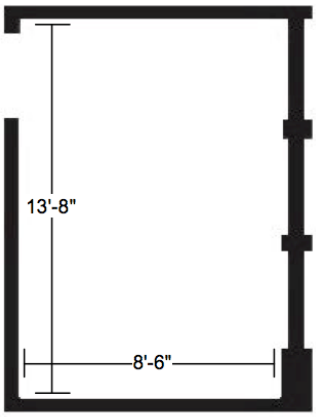

Premium Studio 706
253 sq ft | 10′ Ceiling | Capacity: 12

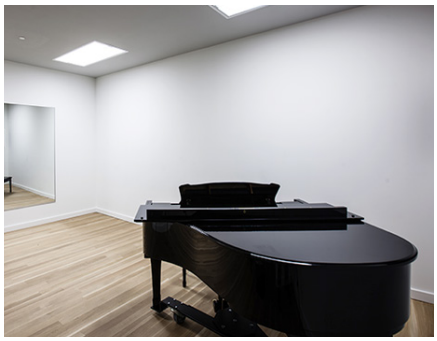

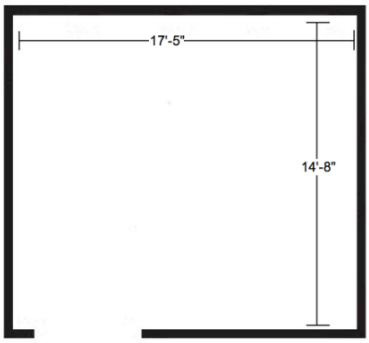

FLOOR PLANS
Studios

Standard Studio 708

New Space *— Photo Coming Soon*

138 sq ft | 10′ Ceiling | Capacity: 6

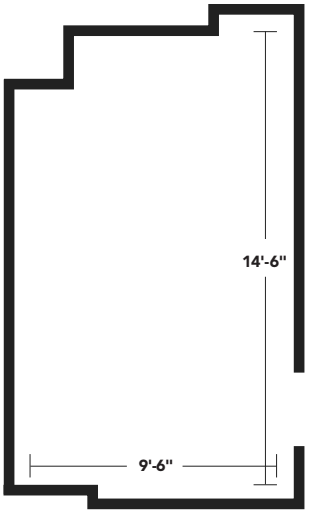

Premium Studio 710

195 sq ft | 10′ Ceiling | Capacity: 8

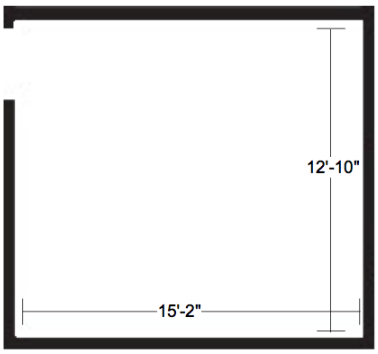

Premium Studio 711

270 sq ft | 10′ Ceiling | Capacity: 12

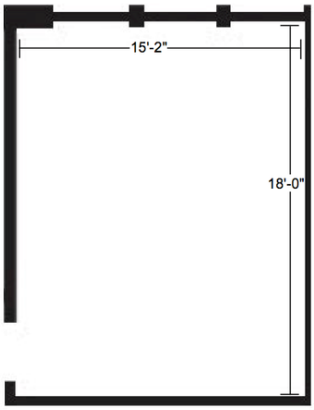

Standard Studio 712

154 sq ft | 10′ Ceiling | Capacity: 8

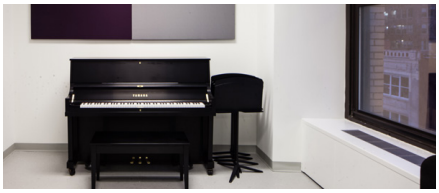

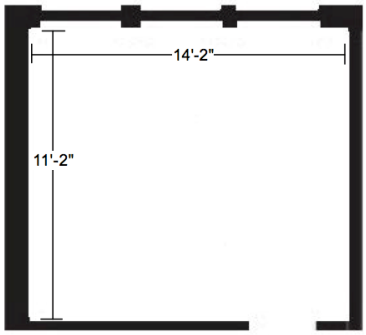

FLOOR PLANS
Studios

Economy Studio 801
110 sq ft | 10′ Ceiling | Capacity: 4

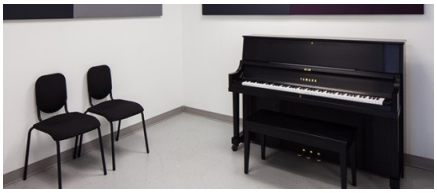

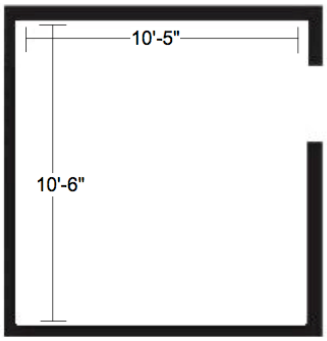

Economy Studio 802
110 sq ft | 10′ Ceiling | Capacity: 4

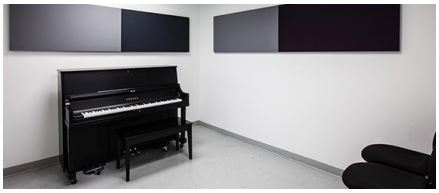

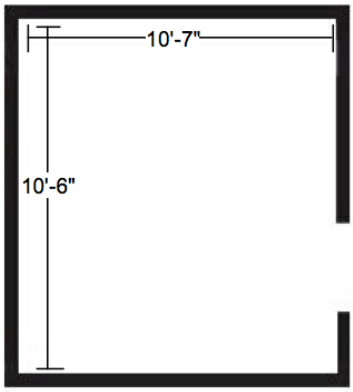

Economy Studio 803
90 sq ft | 10′ Ceiling | Capacity: 4

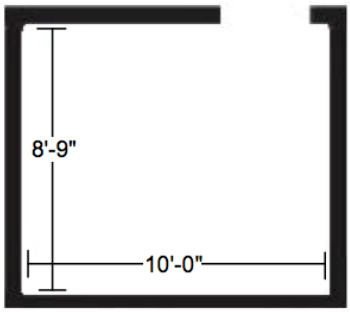

Standard Studio 806
New Space — *Photo Coming Soon*
119 sq ft | 10′ Ceiling | Capacity: 6

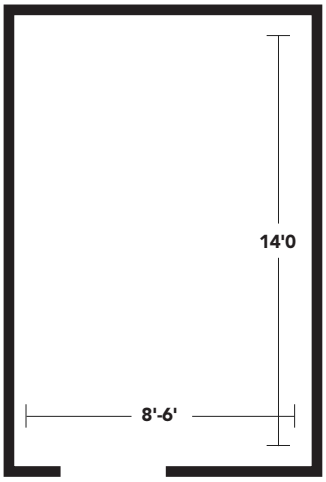
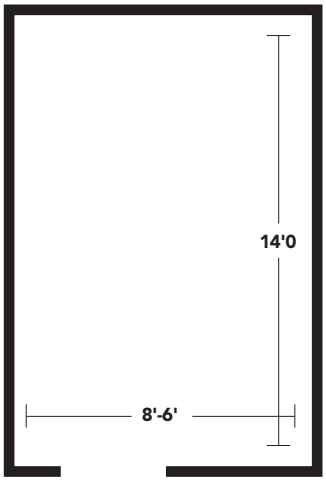
Standard Studio 807
New Space — *Photo Coming Soon*
119 sq ft | 10′ Ceiling | Capacity: 6